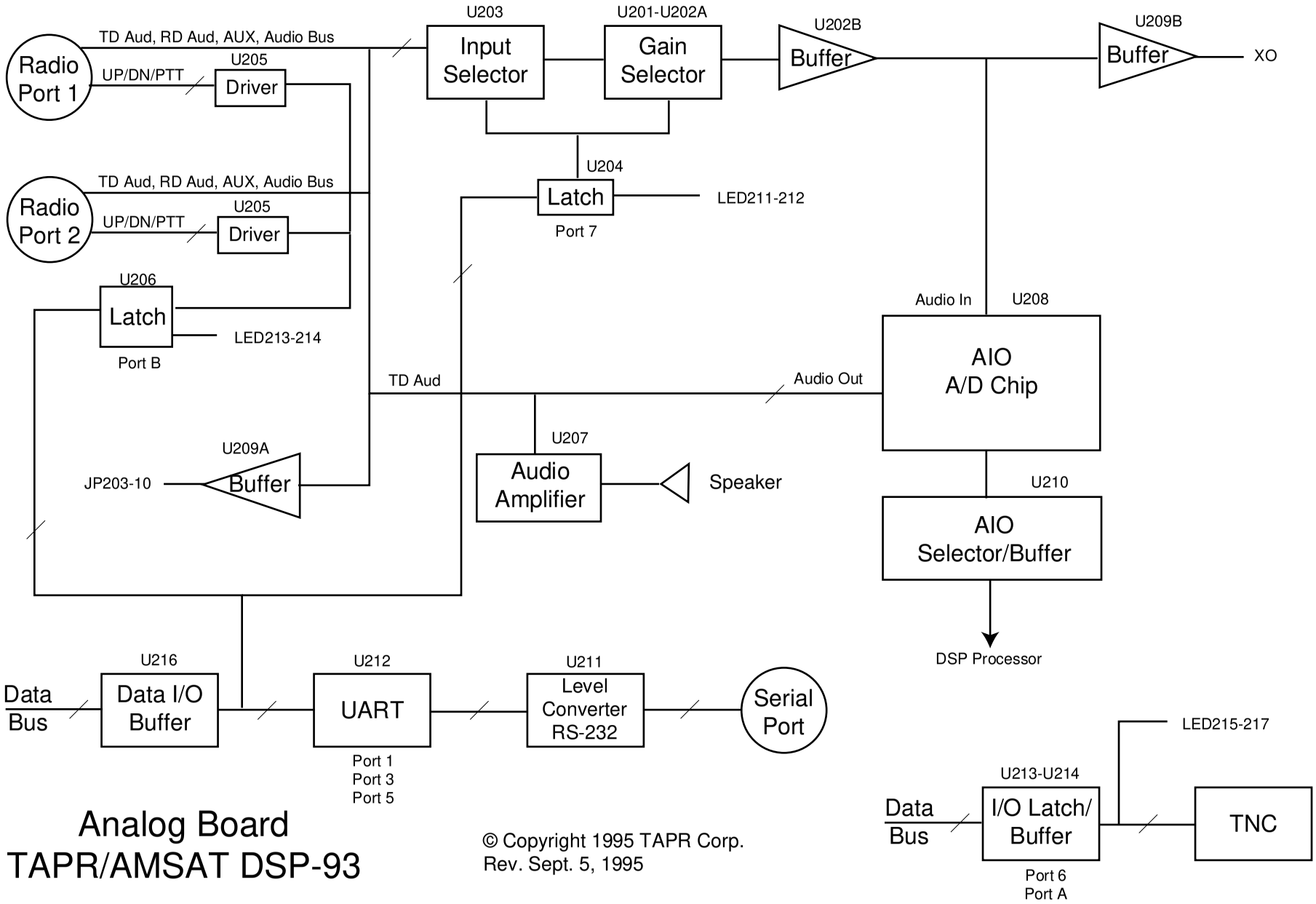

Analog Board
TAPR/AMSAT DSP-93

© Copyright 1995 TAPR Corp.
Rev. Sept. 5, 1995