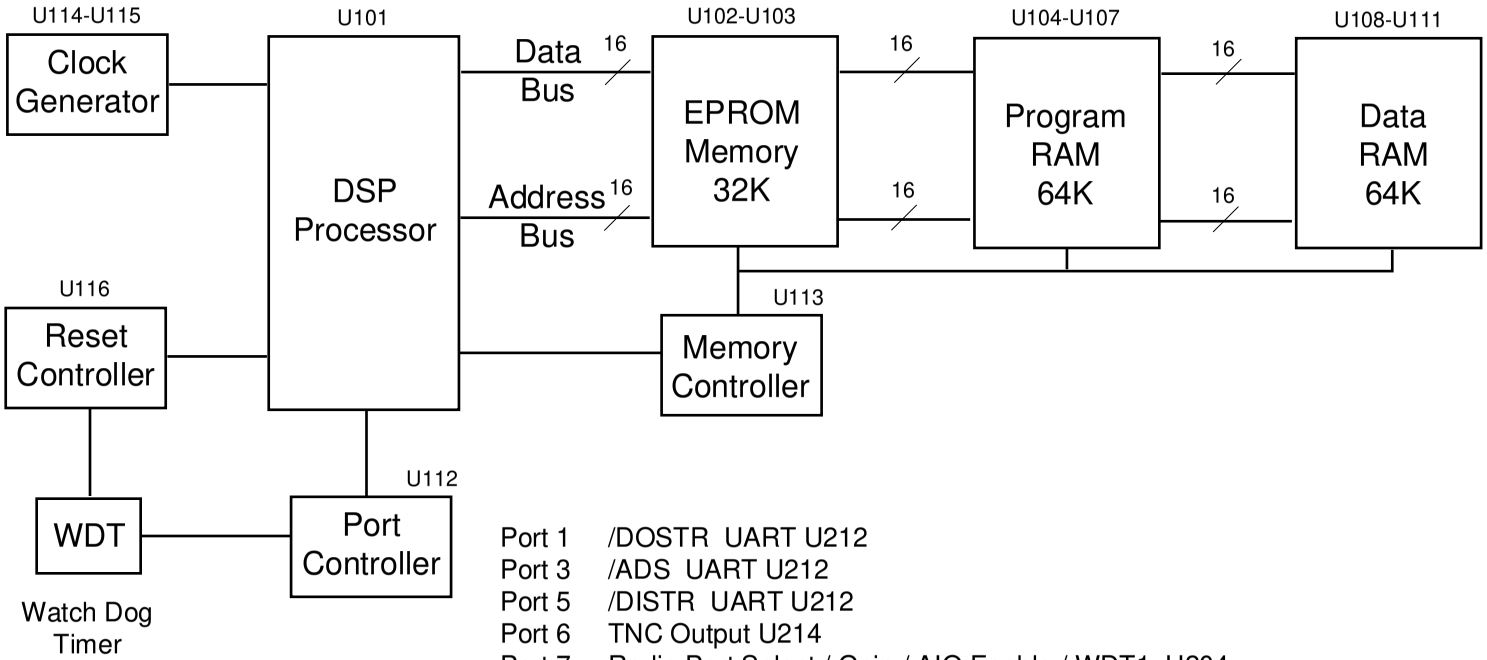


Port 1 /DOSTR UART U212
Port 3 /ADS UART U212
Port 5 /DISTR UART U212
Port 6 TNC Output U214
Port 7 Radio Port Select / Gain / AIO Enable / WDT1 U204
Port A TNC Input U213
Port B Radio Port Digital Control / WDT2 U206
Buffer Direction Select U216

# Digital Board
# TAPR/AMSAT DSP-93

© Copyright 1995 TAPR Corp.
Rev. Sept. 5, 1995